SNL 522-619 (2222 K)

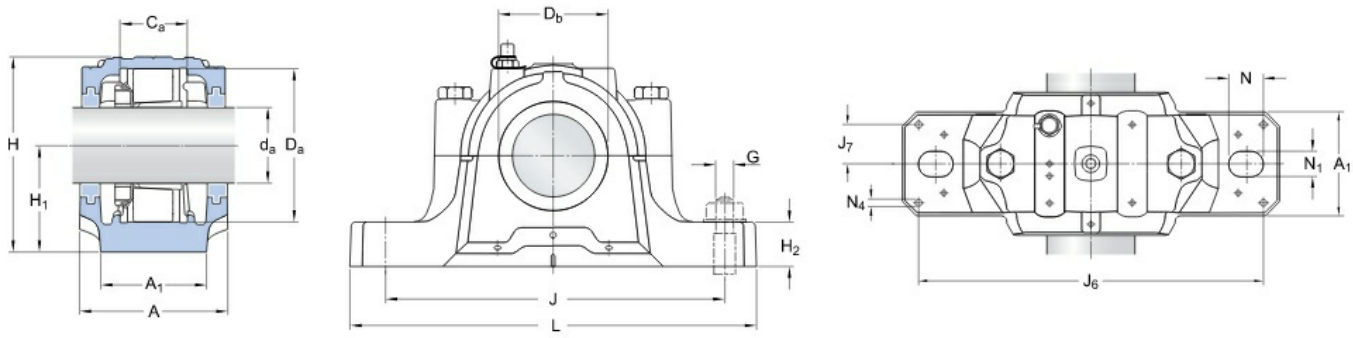

Technical sheet of SNL 522-619 (2222 K)

Type :		Plummer block housings
Model :		SNL 522-619 (2222 K)
Main demensions :	100 mm × 242 mm × 175 mm	Bore Dia × Outside Dia × Width Dia
d mm:	100	inner ring diameter
D mm:	242	Outer ring diameter
B(T) mm:	175	Overall Width

Detailed parameters and installation dimensions:

da: 100 mm, H: 242 mm, A: 175 mm, H1: 125 mm, L: 410 mm, 2222 K

Tradebearing(TBS) - Bearing Enquiry: **https://en.tradebearings.com/**

Welcome Tradebearings for basic bearing designations and dimensions enquiry system
Email: admin@tradebearings.com
Whatsapp/Mob.: +86 15906428604